PRODUCT DATASHEET

Electrical testing accordance with:
《GB/T5968-2011》
《GB/T5966-2011》
LCA standard test

Do not Scale this Drawing
Unit : mm

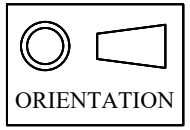

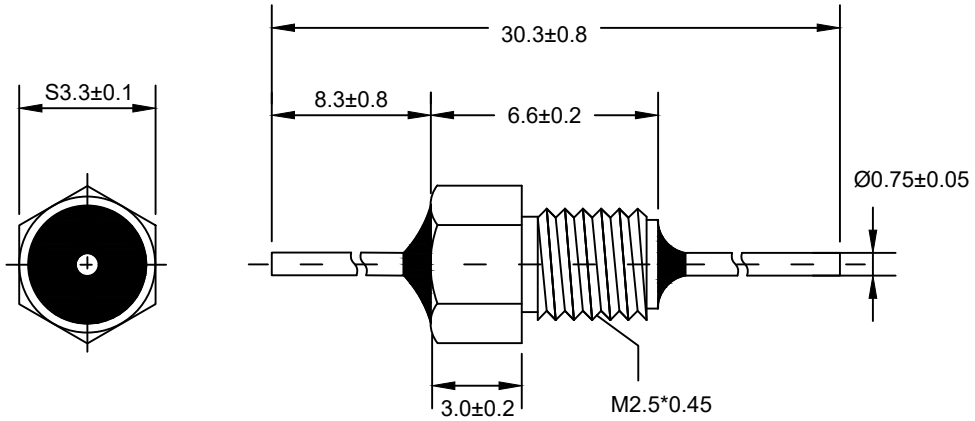

Capacitance	Cap. Tolerance	Dissipation Factor	Rated Voltage	D.W.V.	Rated Current(A)	I.R.(100VDC)	Temp. Coef.	Temp. Range			
10pF	-0%+100%	≤3.0%	50VDC	150VDC	7	≥10GΩ	NPO	-55℃+125℃			

Min. No Load Insertion Loss (dB)@25℃							Install Torque	Soldering Temp	CIRCUIT	
10KHz	100KHz	1MHz	10MHz	100MHz	1GHz	10GHz				
--	--	--	--	--	5	15	0.16 N·m	≤300℃/3S	C	

Material and other parameter note:
1. The case material is silver-plated brass, and the lead material is silver-plated brass.
2. Encapsulated with epoxy resin.
3. The above data is measured under 25℃ conditions, and the electrical performance test frequency is 100KHz/1V.
4. It is recommended to use a soldering iron for soldering. Immersion soldering is strictly prohibited, and the capacitor body must not be struck with hard objects.

Revision Record		Product Series	Thread Mount Feedthrough Filters
	160713-01		
	260119-01	LCA® made in China	**L3325-004**